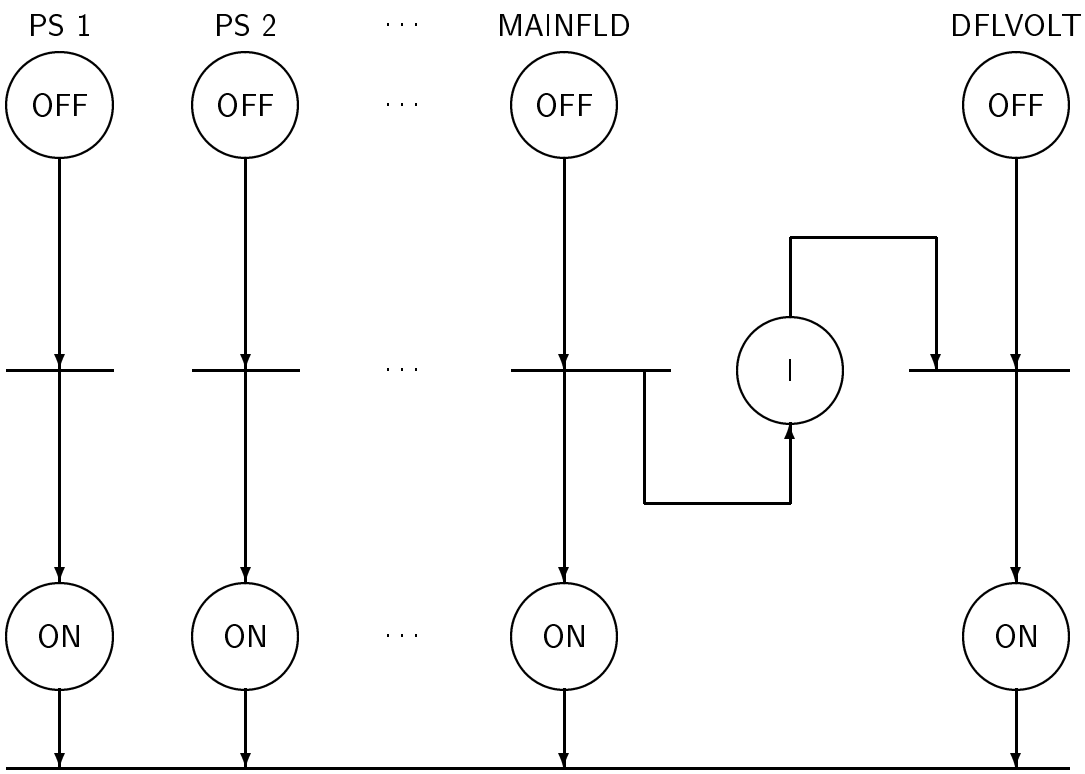

Figure 1: Petri net representation of Standby 1 to Standby 2 transition